## EVALUATION REPORT

**FLORIDA BUILDING CODE, 9TH EDITION (2026)**

*Issued July 30, 2026*

**Manufacturer:** D7 METALS LLC
6003 N Palafox St
Pensacola, FL 32505
(850) 806-9733

**Manufacturing Locations:** Pensacola, FL

**Quality Assurance:** PRI Construction Materials Technologies, LLC (QUA9110)

## SCOPE

**Category:** Roofing
**Subcategory:** Metal Roofing
**Code Edition:** Florida Building Code 9th Edition (2026)
**Code Sections:** 1504.3
**Properties:** Wind Resistance

## REFERENCES

| Entity | Report No. | Standard | Year |
|---|---|---|---|
| PRI Construction Materials Technologies (TST5878) | 2432T0001 | UL 580 | 2006 |
| | | UL 1897 | 2015 |
| PRI Construction Materials Technologies (TST5878) | 2432T0002 | UL 580 | 2006 |
| | | UL 1897 | 2015 |
| PRI Construction Materials Technologies (TST5878) | 2432T0003 | UL 580 | 2006 |
| | | UL 1897 | 2015 |
| PRI Construction Materials Technologies (TST5878) | 2432T0004 | UL 580 | 2006 |
| | | UL 1897 | 2015 |
| PRI Construction Materials Technologies (TST5878) | 2432T0005 | UL 580 | 2006 |
| | | UL 1897 | 2015 |
| PRI Construction Materials Technologies (TST5878) | 2432T0006 | UL 580 | 2006 |
| | | UL 1897 | 2015 |
| PRI Construction Materials Technologies (TST5878) | 2432T0011 | UL 580 | 2006 |
| | | UL 1897 | 2015 |
| PRI Construction Materials Technologies (TST5878) | 2432T0012 | UL 580 | 2006 |
| | | UL 1897 | 2015 |
| PRI Construction Materials Technologies (TST5878) | 2432T0013 | UL 580 | 2006 |
| | | UL 1897 | 2015 |
| PRI Construction Materials Technologies (TST5878) | 2432T0014 | UL 580 | 2006 |
| | | UL 1897 | 2015 |
| PRI Construction Materials Technologies (TST5878) | 2432T0016 | UL 580 | 2006 |
| | | UL 1897 | 2015 |
| PRI Construction Materials Technologies (TST5878) | 2432T0017A | UL 580 | 2006 |
| | | UL 1897 | 2015 |
| PRI Construction Materials Technologies (TST5878) | 2432T0018.1 | UL 580 | 2006 |
| | | UL 1897 | 2015 |
| PRI Construction Materials Technologies (TST5878) | 2432T0018.2 | UL 580 | 2006 |
| | | UL 1897 | 2015 |
| PRI Construction Materials Technologies (TST5878) | 2432T0019.1 | UL 580 | 2006 |
| | | UL 1897 | 2015 |
| PRI Construction Materials Technologies (TST5878) | 2432T0019.2 | UL 580 | 2006 |
| | | UL 1897 | 2015 |



This evaluation report is provided for State of Florida product approval under Rule 61G20-3. The manufacturer shall notify CREEK Technical Services, LLC of any product changes or quality assurance changes throughout the duration for which this report is valid. This evaluation report does not express nor imply warranty, installation, recommended use, or other product attributes that are not specifically addressed herein.

## PRODUCT DESCRIPTION

### D-PBR

**Profile:** 1 1/4-inch ribs at 12-inch o.c.; 36-inch coverage
**Description:** Non-structural, through fastened roof panel
**Material:** Min. 26 ga. ASTM A792 AZ55, Grade 80 steel; Shall conform with FBC Section 1507.4.3

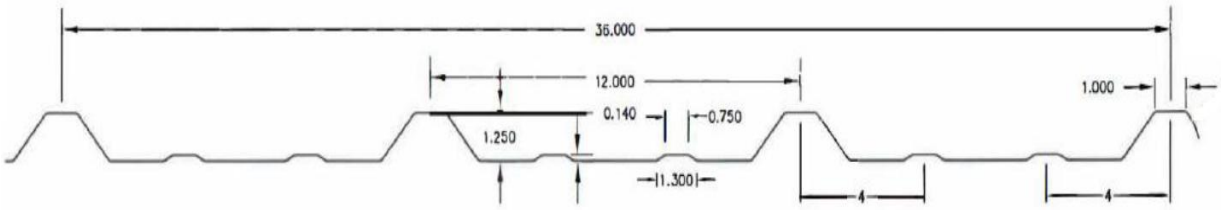


### D-RIB

**Profile:** 3/4-inch ribs at 9-inch o.c.; 36-inch coverage
**Description:** Non-structural, through fastened roof panel
**Material:** Min. 26 ga. ASTM A792 AZ50, Grade 50 steel; Shall conform with FBC Section 1507.4.3

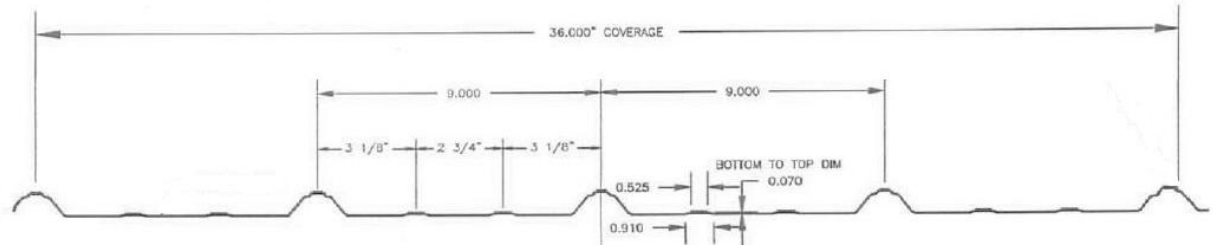


### DSS-100

**Profile:** 1-inch ribs; Max. 16-inch coverage
**Description:** Non-structural, through fastened roof panel with nail strip
**Material:** Min. 0.032-inch ASTM B209 3105 H 14 Aluminum ($F_y$ = min. 20ksi) or Min. 26 ga. ASTM A792 AZ50, Grade 50 steel; Shall conform with FBC Section 1507.4.3

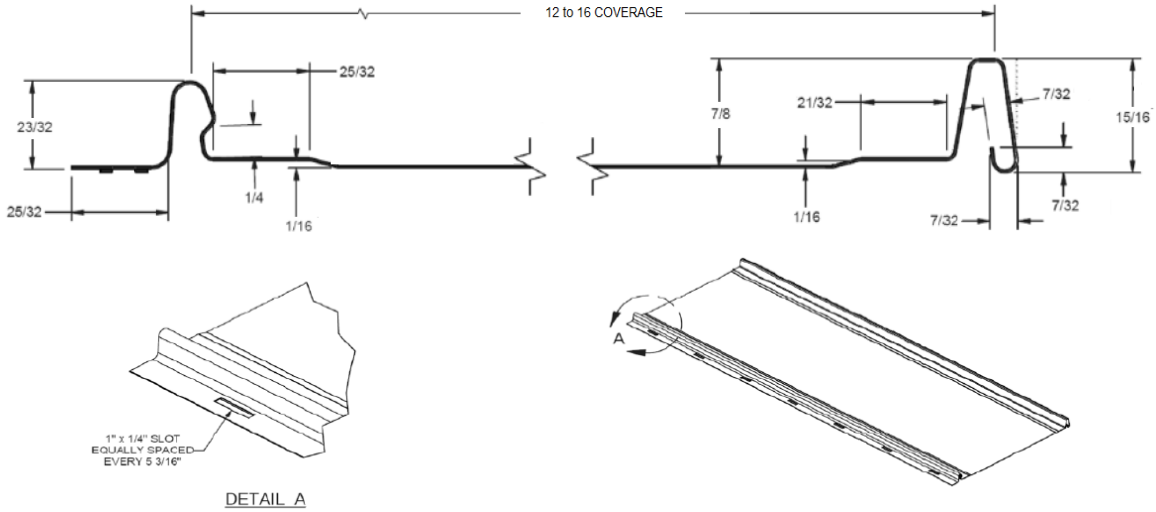




This evaluation report is provided for State of Florida product approval under Rule 61G20-3. The manufacturer shall notify CREEK Technical Services, LLC of any product changes or quality assurance changes throughout the duration for which this report is valid. This evaluation report does not express nor imply warranty, installation, recommended use, or other product attributes that are not specifically addressed herein.

## DSS-210

**Profile:** 2-inch standing seam; 180° mechanical lock; Max. 16-inch coverage
**Description:** Non-structural, roof panel
**Material:** Min. 24 ga. ASTM A792 AZ50, Grade 50 steel; Shall conform with FBC Section 1507.4.3

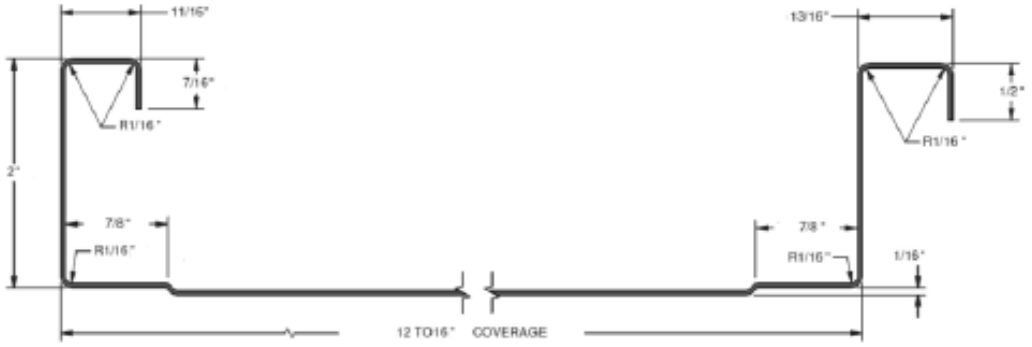


## DSS-675

**Profile:** 1 3/4-inch snap lock standing seam; Max. 18-inch coverage
**Description:** Non-structural, roof panel
**Material:** Min. 0.032" ASTM B209 3105 H14 Aluminum ($F_y$ = min. 20ksi) or Min. 26 ga. ASTM A792 AZ50, Grade 50 steel; Shall conform with FBC Section 1507.4.3

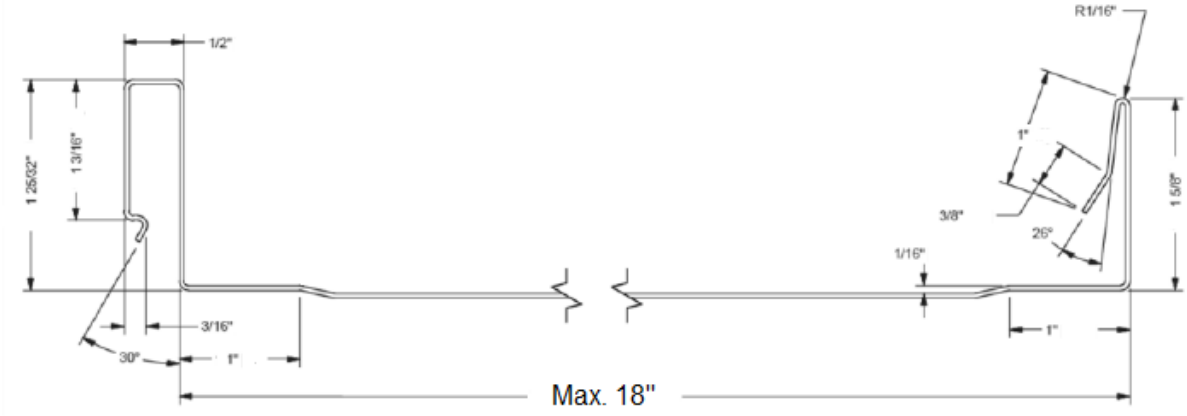


## 5V Crimp

**Profile:** 3/8-inch ribs; Max. 24-inch coverage
**Description:** Non-structural, through fastened roof panel
**Material:** Min. 26 ga. ASTM A792 AZ50, Grade 50 steel; Shall conform with FBC Section 1507.4.3

This evaluation report is provided for State of Florida product approval under Rule 61G20-3. The manufacturer shall notify CREEK Technical Services, LLC of any product changes or quality assurance changes throughout the duration for which this report is valid. This evaluation report does not express nor imply warranty, installation, recommended use, or other product attributes that are not specifically addressed herein.

## LIMITATIONS

1. This report is not for use in the HVHZ.
2. Fire classification is not within the scope of this evaluation.
3. The roof deck and the roof deck attachment shall be designed by others to meet the minimum design loads established for components and cladding and in accordance with FBC requirements.
4. Roof slope shall be in accordance with FBC Section 1507.4.2.
5. Reroofing shall be in accordance with FBC Section 1511. Recovery versus replacement shall be evaluated in accordance with FBC Section 1511.3.
6. Installation of the evaluated products shall comply with this report, the FBC and the manufacturer's published application instructions. Where discrepancies exist between these sources, the more restrictive and FBC compliant installation detail shall prevail.
7. All materials shall conform to FBC Section 1506 and 1711.
8. FBC Section 1504.3.1.1 is not within the scope of this evaluation. Compliance with FBC Section 1504.3.1.1 shall be established through other *approved* products.
9. All products listed in this report shall be manufactured under a quality assurance program in compliance with Rule 61G20-3.

## COMPLIANCE STATEMENT

This report has been prepared in accordance with F.A.C. Rule 61G20-3.

**This item has been digitally signed and sealed by Zachary R. Priest, PE, on 7/30/2026.**

**Printed copies of this document are not considered signed and sealed and the signature must be verified on any electronic copies.**

Digitally signed by Zachary R. Priest

2026.07.30 10:51:40 -04'00'

Zachary R. Priest, P.E.
Florida Registration No. 74021
Organization No. ANE9641

## CERTIFICATION OF INDEPENDENCE

CREEK Technical Services, LLC does not have, nor will it acquire, a financial interest in any company manufacturing or distributing products under this evaluation.

CREEK Technical Services, LLC is not owned, operated, or controlled by any company manufacturing or distributing products under this evaluation.

Zachary R. Priest, P.E. does not have, nor will acquire, a financial interest in any company manufacturing or distributing products under this evaluation.

Zachary R. Priest, P.E. does not have, nor will acquire, a financial interest in any other entity involved in the approval process of the product.

## APPENDICES

1) APPENDIX A – Installation (2 pages)
2) APPENDIX B – Approved Roof Systems (4 pages)
3) APPENDIX C – Design Wind Loads (4 pages)



This evaluation report is provided for State of Florida product approval under Rule 61G20-3. The manufacturer shall notify CREEK Technical Services, LLC of any product changes or quality assurance changes throughout the duration for which this report is valid. This evaluation report does not express nor imply warranty, installation, recommended use, or other product attributes that are not specifically addressed herein.

This evaluation report is provided for State of Florida product approval under Rule 61G20-3. The manufacturer shall notify CREEK Technical Services, LLC of any product changes or quality assurance changes throughout the duration for which this report is valid. This evaluation report does not express nor imply warranty, installation, recommended use, or other product attributes that are not specifically addressed herein.

## INSTALLATION

*Note - Refer to the* ***APPROVED ROOF SYSTEMS*** *section of this report for specific installation details of a selected system.*

Unless otherwise specified in this report the following installation details shall be met for the named products:

| Component | Product | Installation Detail |
|---|---|---|
| Fasteners | #9-15 Woodgrip HWH screw with 0.5-inch sealing washer | Shall penetrate through the sheathing a minimum 3/8-inch. Shall be corrosion resistant in accordance with FBC section 1507.4.4. |
| | #10 pancake head wood screw | |
| | #10-8 pancake head wood screw | |
| | #10-9 pancake head wood screw | |
| | #10-12 pancake head wood screw | |
| | #10-14 Woodtite HLX screw with 0.5-inch sealing washer | |
| | #15 GAF Drill-Tec XHD Fastener | Shall penetrate through the top rib of the steel deck a minimum 3/4 in. Must be corrosion resistant in accordance with FBC section 1507.4.4. |
| Bearing Plates | Bearing Plate | 20ga. steel, 5-inch x 4-inch, pre-punched fastener holes |
| Clips | 2" Standing Seam Clip | 22ga.; 2 1/8-inch height x 3-inch width<br>2" Newtech Mech Lock Panel Clip, Direct Metals CMF2183334G22<br> |
| | 1-15/16 Snaplock Clip | 18ga.; 1 15/16-inch height x 3 1/2-inch width, UL Classified<br>AMSI Supply 178-SLU-18-G<br> |
| Seam sealant | UltiBond Metal Roof Sealant | Applied in 1/4-inch beads; Translucent neutral cure silicone sealant |



This evaluation report is provided for State of Florida product approval under Rule 61G20-3. The manufacturer shall notify CREEK Technical Services, LLC of any product changes or quality assurance changes throughout the duration for which this report is valid. This evaluation report does not express nor imply warranty, installation, recommended use, or other product attributes that are not specifically addressed herein.

## APPENDIX A

| Fastening Details | |
|---|---|
| Nomenclature | Attachment |
| *PBR Type 1* | 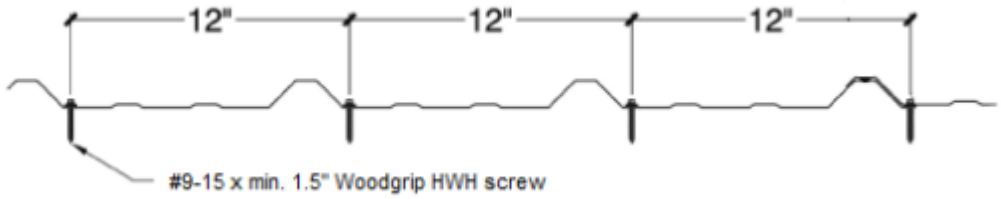 |
| *RIB Type 1* | 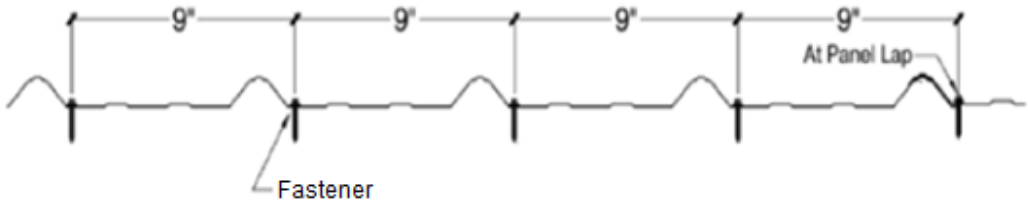 |
| *SS Type 1* | 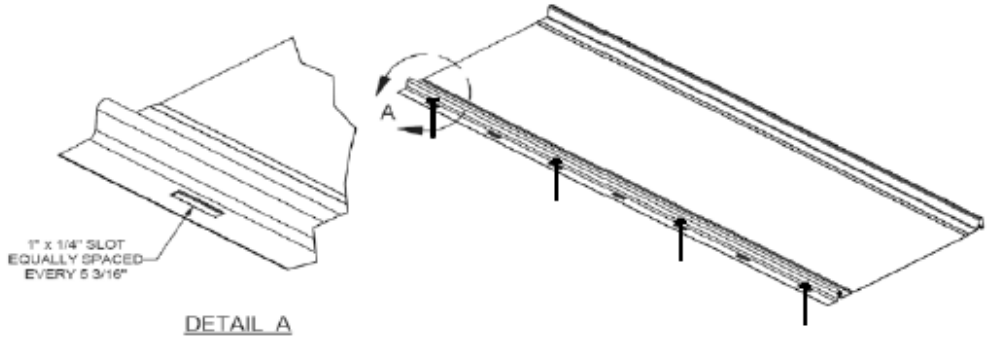 |
| *SS Type 2* | 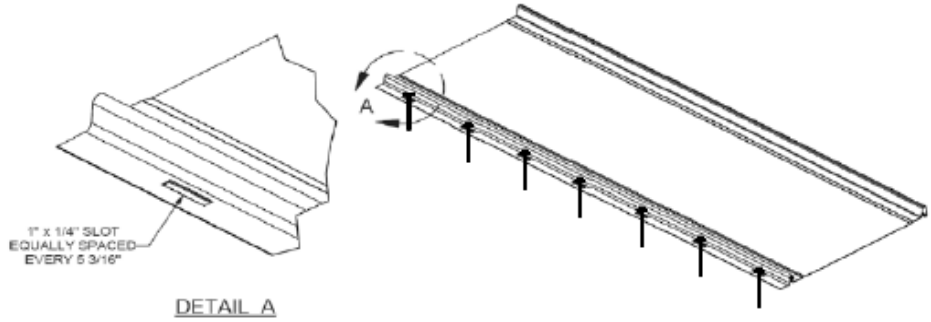 |
| *5V Type 1* | 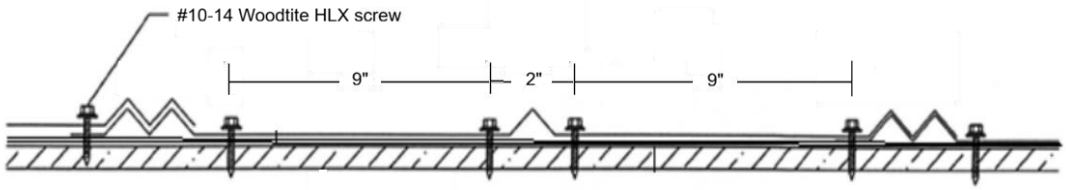 |



This evaluation report is provided for State of Florida product approval under Rule 61G20-3. The manufacturer shall notify CREEK Technical Services, LLC of any product changes or quality assurance changes throughout the duration for which this report is valid. This evaluation report does not express nor imply warranty, installation, recommended use, or other product attributes that are not specifically addressed herein.

## APPROVED ROOF SYSTEMS

The following notes shall be observed when using the assembly tables below.

1. Maximum Design Pressure (*MDP*) was calculated using a 2:1 margin of safety per FBC Section 1504.9.
2. Refer to LIMITATIONS and sections of this evaluation when using the table(s) below.
3. Refer to INSTALLATION section of this report for installation detail when the information is not explicitly stated for the selected assembly.
4. The on-center (o.c.) spacing given is the maximum allowable attachment spacing for the rated system.
5. The panel thickness or gauge is the minimum allowable.
6. Steel Deck shall be designed by others in accordance with FBC requirements and shall be minimum 22 ga ($F_y$ = min.40 ksi) Wide Rib Deck (Type WR) conforming to ANSI/SDI-RD1.0 & FBC.
7. Wood Deck shall be designed by others in accordance with FBC requirements. 15/32 CDX plywood shall be minimum 15/32-inch thick, PS 1-19 Grade C-D, Exposure 1, APA Span-Rated plywood sheathing at maximum 24-inch span.
8. No. 2 SYP wood battens used over solidly sheathed decks shall be installed parallel to the eave and 90 degrees to the roof trusses/rafters. Wood battens shall be located under each panel fastener row.
9. No. 2 SYP wood battens shall be secured in place with one (1) min. 0.113 in. x 2-3/8 in. ring shank nail installed max. 8 in. o.c. staggered into the plywood deck.

| Roof System Numbers and Definitions | |
|---|---|
| PBR-W-# | D-PBR Panel over Wood Deck (New or Existing) |
| RIB-W-# | D- RIB Panel over Wood Deck (New or Existing) |
| 100-W-# | DSS-100 Panel over Wood Deck (New or Existing) |
| 210-S-# | DSS-210 Panel over Steel Deck (New or Existing) |
| 210-W-# | DSS-210 Panel over Wood Deck (New or Existing) |
| 675-W-# | DSS-675 Panel over Wood Deck (New or Existing) |
| 5V-W-# | 5V Crimp Panel over Wood Deck (New or Existing) |

| Approved Systems for PBR Panel over Wood Deck (New or Existing) | | | | | |
|---|---|---|---|---|---|
| System No. | Deck | Underlayment | Roof Panel | Panel Attachment | *MDP* (psf) |
| PBR-W-1 | Min. 15/32 CDX plywood | As required per FBC | Min. 26ga. steel D-PBR 36-inch coverage | *PBR Type 1* attachment with #9-15 HWH screws spaced 18-inch o.c. | **-67.5** |
| PBR-W-2 | Min. 15/32 CDX plywood | As required per FBC | Min. 26ga. steel D-PBR 36-inch coverage | *PBR Type 1* attachment with #9-15 HWH screws spaced 6-inch o.c. | **-153.5** |



This evaluation report is provided for State of Florida product approval under Rule 61G20-3. The manufacturer shall notify CREEK Technical Services, LLC of any product changes or quality assurance changes throughout the duration for which this report is valid. This evaluation report does not express nor imply warranty, installation, recommended use, or other product attributes that are not specifically addressed herein.

## APPENDIX B

| Approved Systems for D-RIB Panel over Wood Deck (New or Existing) | | | | | | |
|---|---|---|---|---|---|---|
| System No. | Deck | Battens (Note 8) | Underlayment | Roof Panel | Panel Attachment | *MDP* (psf) |
| RIB-W-1 | Min. 15/32 CDX plywood | - | As required per FBC | Min. 26ga. steel, Grade 80 D-RIB 36-inch coverage | *RIB Type 1* attachment with #9-15 HWH screws spaced 24-inch o.c. | **-75** |
| RIB-W-2 | Min. 15/32 CDX plywood | - | As required per FBC | Min. 26ga. steel D-RIB 36-inch coverage | *RIB Type 1* attachment with #10-14 HLX x min. 1.5-inch screws spaced 6-inch o.c. | **-198.5** |
| RIB-W-3 | Min. 15/32 CDX plywood with OPTIONAL single layer of asphalt shingles | No. 2 SYP min. 1x4 wood battens secured per Note 9 | As required per FBC | Min. 26ga. steel D-RIB 36-inch coverage | *RIB Type 1* attachment with #10-14 HLX x min. 1.5-inch screws spaced 12-inch o.c.; Fasteners shall penetrate through the sheathing a minimum 3/8-inch | **-198.5** |

| Approved Systems for DSS-100 Panel over Wood Deck (New or Existing) | | | | | |
|---|---|---|---|---|---|
| System No. | Deck | Underlayment | Roof Panel | Panel Attachment | *MDP* (psf) |
| 100-W-1 | Min. 15/32 CDX plywood | As required per FBC | Min. 26ga. steel DSS-100 Max. 16-inch coverage | *SS Type 1* attachment with #10 pancake head screws secured 10-inch o.c. into every other slot along the nail strip | **-41.6** |
| 100-W-2 | Min. 15/32 CDX plywood | As required per FBC | Min. 0.032" Al DSS-100 Max. 16-inch coverage | *SS Type 2* attachment with #10-12 pancake head screws secured 5 3/16-inch o.c. into every slot along the nail strip; UltiBond Metal Roof Sealant shall be applied along the inside of the female seam prior to seaming | **-123.5** |
| 100-W-3 | Min. 15/32 CDX plywood | As required per FBC | Min. 26ga. steel DSS-100 Max. 16-inch coverage | *SS Type 2* attachment with #10 pancake head screws secured 5 3/16-inch o.c. into every slot along the nail strip;UltiBond Metal Roof Sealant shall be applied along the inside of the female seam prior to seaming | **-131** |
| 100-W-4 | Min. 15/32 CDX plywood | As required per FBC | Min. 24ga. steel DSS-100 Max. 16-inch coverage | *SS Type 2* attachment with #10-8 pancake head screws secured 5 3/16-inch o.c. into every slot along the nail strip; UltiBond Metal Roof Sealant shall be applied along the inside of the female seam prior to seaming | **-153.5** |



This evaluation report is provided for State of Florida product approval under Rule 61G20-3. The manufacturer shall notify CREEK Technical Services, LLC of any product changes or quality assurance changes throughout the duration for which this report is valid. This evaluation report does not express nor imply warranty, installation, recommended use, or other product attributes that are not specifically addressed herein.

## APPENDIX B

| Approved Systems for DSS-210 Panel over Steel Deck (New or Existing) | | | | | | |
|---|---|---|---|---|---|---|
| System No. | Deck | Insulation | Underlayment | Roof Panel | Panel Attachment | *MDP* (psf) |
| 210-S-1 | Min. 22 ga. Type B Steel Deck | Min. 1-inch *Approved* insulation board | As required per FBC | Min. 24ga. steel DSS-210 Max. 16-inch coverage | 2" Standing Seam Clip attached 12-inch o.c. with two (2) #15 Drill-Tec XHD screws per clip through the outside holes; clips installed over a bearing plates; Panels shall be mechanically seamed with 180° lock | **-138.5** |

| Approved Systems for DSS-210 Panel over Wood Deck (New or Existing) | | | | | |
|---|---|---|---|---|---|
| System No. | Deck | Underlayment | Roof Panel | Panel Attachment | *MDP* (psf) |
| 210-W-1 | Min. 15/32 CDX plywood | As required per FBC | Min. 24ga. steel DSS-210 Max. 16-inch coverage | 2" Standing Seam Clip attached 16-inch o.c. with two (2) #10-9 pancake head screws per clip through the outside holes; Panels shall be mechanically seamed with 180° lock | **-101** |

| Approved Systems for DSS-675 Panel over Wood Deck (New or Existing) | | | | | |
|---|---|---|---|---|---|
| System No. | Deck | Underlayment | Roof Panel | Panel Attachment | *MDP* (psf) |
| 675-W-1 | Min. 15/32 CDX plywood | As required per FBC | Min. 26ga. steel DSS-675 Max. 16-inch coverage | 1-15/16 Snaplock Clip attached 16-inch o.c. with two (2) #10-9 pancake head screws per clip | **-63.5** |
| 675-W-2 | Min. 15/32 CDX plywood | As required per FBC | Min. 0.032" aluminum DSS-675 Max. 16-inch coverage | 1-15/16 Snaplock Clip attached 16-inch o.c. with two (2) #10-9 pancake head screws per clip | **-71** |
| 675-W-3 | Min. 15/32 CDX plywood | As required per FBC | Min. 24ga. steel DSS-675 Max. 18-inch coverage | 1-15/16 Snaplock Clip attached 16-inch o.c. with two (2) #10 pancake head screws per clip; UltiBond Metal Roof sealant shall be applied at the top of the vertical leg on the male seam prior to engaging the female seam over the male seam | **-71** |



This evaluation report is provided for State of Florida product approval under Rule 61G20-3. The manufacturer shall notify CREEK Technical Services, LLC of any product changes or quality assurance changes throughout the duration for which this report is valid. This evaluation report does not express nor imply warranty, installation, recommended use, or other product attributes that are not specifically addressed herein.

## APPENDIX B

| Approved Systems for DSS-675 Panel over Wood Deck (New or Existing) | | | | | |
|---|---|---|---|---|---|
| System No. | Deck | Underlayment | Roof Panel | Panel Attachment | *MDP* (psf) |
| 675-W-4 | Min. 15/32 CDX plywood | As required per FBC | Min. 26ga. steel DSS-675 Max. 16-inch coverage | 1-15/16 Snaplock Clip attached 12-inch o.c. with two (2) #10-9 pancake head screws per clip | **-78.5** |

| Approved Systems for 5V Crimp Panel over Wood Deck (New or Existing) | | | | | |
|---|---|---|---|---|---|
| System No. | Deck | Underlayment | Roof Panel | Panel Attachment | *MDP* (psf) |
| 5V-W-1 | Min. 15/32 CDX plywood | As required per FBC | Min. 26ga. steel, 5V Crimp Max. 24-inch coverage | *5V Type 1* attachment with #10-14 Woodtite HLX screws with 0.5-inch sealing washer spaced 24-inch o.c. | **-63.5** |
| 5V-W-2 | Min. 15/32 CDX plywood | As required per FBC | Min. 26ga. steel 5V Crimp Max. 24-inch coverage | *5V Type 1* attachment with #10-14 Woodtite HLX screw with 0.5-inch sealing washer spaced 6-inch o.c. | **-123.5** |



This evaluation report is provided for State of Florida product approval under Rule 61G20-3. The manufacturer shall notify CREEK Technical Services, LLC of any product changes or quality assurance changes throughout the duration for which this report is valid. This evaluation report does not express nor imply warranty, installation, recommended use, or other product attributes that are not specifically addressed herein.

## DESIGN WIND LOADS

The following tables provide design wind loads for components and cladding in accordance with Section 1609 of the FBC and ASCE 7-22 under the following provisions:

1. Wind speeds for risk category I, II, III, and IV buildings shall be as defined in Section 1609 of the FBC.
2. Exposure B, C, and D shall be as defined in section 1609 of the FBC.
3. Design wind load provided only for gable/hip roofs with roof slopes between 2:12 and 6.1:12
4. All calculations are based on an effective wind area of 10-ft$^2$ or less.
5. Topographic factors such as escarpments or hills have been excluded from the analysis
6. Overhangs have been excluded from the analysis.
7. Wind directionality factor, $K_d$ = 0.85
8. Ground elevation factor, $K_e$ = 1.0
9. $V_{ult}$ is shown in the tables below. Design wind loads are calculated using $V_{asd} = V_{ult}\sqrt{0.6}$ per 1609.3.1.
10. Zone 2 applies to Zone 3 for Hip Roofs where the slope is between 2:12 and 6.1:12Projects with mean roof heights greater than 60-ft shall be evaluated by a licensed design professional
11. Zones 1, 2, and 3 shall be defined as shown below. Dimension "a" shall be 10% of the least horizontal dimension or (0.4 x *Mean Roof Height)*, whichever is smaller, but not less than either 4% of the least horizontal dimension or 3ft

| Gable Roofs | | Hip Roofs |
|---|---|---|
| Slopes 2:12 to 6.1:12 | Slopes >6.1:12 to 12:12 | Slopes 2:12 to 12:12 |
| 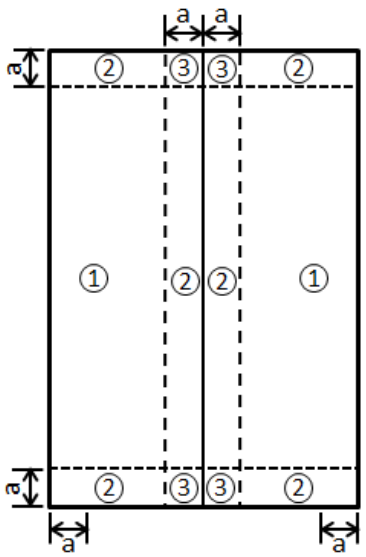 | 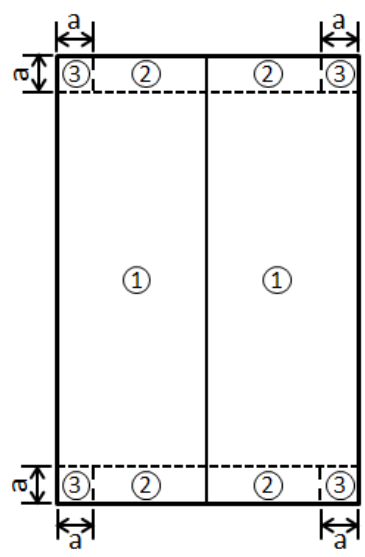 | 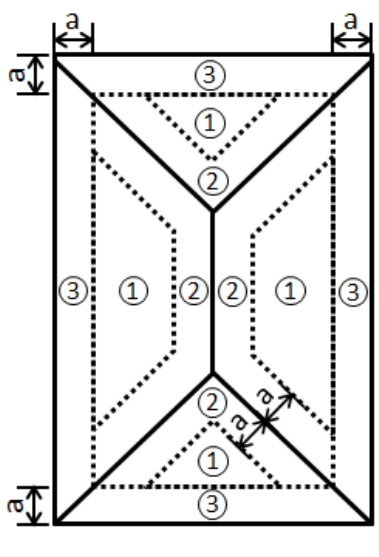 |



This evaluation report is provided for State of Florida product approval under Rule 61G20-3. The manufacturer shall notify CREEK Technical Services, LLC of any product changes or quality assurance changes throughout the duration for which this report is valid. This evaluation report does not express nor imply warranty, installation, recommended use, or other product attributes that are not specifically addressed herein.

## APPENDIX C

| Gable/Hip Roofs in **Exposure B** (Roof slope between 2:12 and 12:12) | | | | | | | | | | | |
|---|---|---|---|---|---|---|---|---|---|---|---|
| Building Type | Zone | Mean Roof Height (ft) | Basic Wind Speed (mph) | | | | | | | | |
| | | | 120 | 130 | 140 | 150 | 160 | 170 | 180 | 190 | 200 |
| Enclosed/ Partially Open | 1 | 20 | -25.4 | -29.8 | -34.6 | -39.7 | -45.2 | -51.0 | -57.2 | -63.7 | -70.6 |
| | | 25 | -26.9 | -31.6 | -36.6 | -42.0 | -47.8 | -54.0 | -60.5 | -67.5 | -74.7 |
| | | 30 | -28.3 | -33.2 | -38.5 | -44.1 | -50.2 | -56.7 | -63.6 | -70.8 | -78.5 |
| | | 40 | -30.5 | -35.8 | -41.5 | -47.7 | -54.2 | -61.2 | -68.6 | -76.5 | -84.7 |
| | | 50 | -32.4 | -38.0 | -44.1 | -50.6 | -57.6 | -65.0 | -72.8 | -81.2 | -89.9 |
| | | 60 | -34.0 | -39.9 | -46.3 | -53.1 | -60.4 | -68.2 | -76.5 | -85.2 | -94.4 |
| | 2 | 20 | -33.6 | -39.4 | -45.7 | -52.5 | -59.7 | -67.4 | -75.5 | -84.2 | -93.3 |
| | | 25 | -35.5 | -41.7 | -48.4 | -55.5 | -63.2 | -71.3 | -80.0 | -89.1 | -98.7 |
| | | 30 | -37.3 | -43.8 | -50.8 | -58.3 | -66.3 | -74.9 | -84.0 | -93.6 | -103.7 |
| | | 40 | -40.3 | -47.3 | -54.9 | -63.0 | -71.6 | -80.9 | -90.7 | -101.0 | -111.9 |
| | | 50 | -42.8 | -50.2 | -58.2 | -66.8 | -76.0 | -85.8 | -96.2 | -107.2 | -118.8 |
| | | 60 | -44.9 | -52.7 | -61.1 | -70.2 | -79.8 | -90.1 | -101.0 | -112.6 | -124.7 |
| | 3 | 20 | -44.1 | -51.7 | -60.0 | -68.8 | -78.3 | -88.4 | -99.1 | -110.5 | -122.4 |
| | | 25 | -46.7 | -54.8 | -63.5 | -72.9 | -82.9 | -93.6 | -105.0 | -117.0 | -129.6 |
| | | 30 | -49.0 | -57.5 | -66.7 | -76.5 | -87.1 | -98.3 | -110.2 | -122.8 | -136.1 |
| | | 40 | -52.9 | -62.1 | -72.0 | -82.6 | -94.0 | -106.1 | -119.0 | -132.6 | -146.9 |
| | | 50 | -56.1 | -65.9 | -76.4 | -87.7 | -99.8 | -112.6 | -126.3 | -140.7 | -155.9 |
| | | 60 | -58.9 | -69.2 | -80.2 | -92.1 | -104.8 | -118.3 | -132.6 | -147.7 | -163.7 |
| Partially Enclosed | 1 | 20 | -29.7 | -34.9 | -40.5 | -46.5 | -52.8 | -59.7 | -66.9 | -74.5 | -82.6 |
| | | 25 | -31.5 | -36.9 | -42.8 | -49.2 | -56.0 | -63.2 | -70.8 | -78.9 | -87.4 |
| | | 30 | -33.0 | -38.8 | -45.0 | -51.6 | -58.7 | -66.3 | -74.4 | -82.8 | -91.8 |
| | | 40 | -35.7 | -41.9 | -48.6 | -55.8 | -63.4 | -71.6 | -80.3 | -89.4 | -99.1 |
| | | 50 | -37.9 | -44.4 | -51.5 | -59.2 | -67.3 | -76.0 | -85.2 | -94.9 | -105.2 |
| | | 60 | -39.8 | -46.7 | -54.1 | -62.1 | -70.7 | -79.8 | -89.4 | -99.7 | -110.4 |
| | 2 | 20 | -37.9 | -44.5 | -51.6 | -59.2 | -67.4 | -76.0 | -85.2 | -95.0 | -105.2 |
| | | 25 | -40.1 | -47.1 | -54.6 | -62.7 | -71.3 | -80.5 | -90.3 | -100.6 | -111.4 |
| | | 30 | -42.1 | -49.4 | -57.3 | -65.8 | -74.9 | -84.5 | -94.8 | -105.6 | -117.0 |
| | | 40 | -45.5 | -53.4 | -61.9 | -71.1 | -80.8 | -91.3 | -102.3 | -114.0 | -126.3 |
| | | 50 | -48.3 | -56.6 | -65.7 | -75.4 | -85.8 | -96.9 | -108.6 | -121.0 | -134.1 |
| | | 60 | -50.7 | -59.5 | -69.0 | -79.2 | -90.1 | -101.7 | -114.0 | -127.0 | -140.7 |
| | 3 | 20 | -48.4 | -56.8 | -65.8 | -75.6 | -86.0 | -97.1 | -108.8 | -121.3 | -134.4 |
| | | 25 | -51.2 | -60.1 | -69.7 | -80.0 | -91.1 | -102.8 | -115.3 | -128.4 | -142.3 |
| | | 30 | -53.8 | -63.1 | -73.2 | -84.0 | -95.6 | -107.9 | -121.0 | -134.8 | -149.4 |
| | | 40 | -58.1 | -68.1 | -79.0 | -90.7 | -103.2 | -116.5 | -130.6 | -145.6 | -161.3 |
| | | 50 | -61.6 | -72.3 | -83.9 | -96.3 | -109.6 | -123.7 | -138.7 | -154.5 | -171.2 |
| | | 60 | -64.7 | -75.9 | -88.1 | -101.1 | -115.0 | -129.8 | -145.6 | -162.2 | -179.7 |



This evaluation report is provided for State of Florida product approval under Rule 61G20-3. The manufacturer shall notify CREEK Technical Services, LLC of any product changes or quality assurance changes throughout the duration for which this report is valid. This evaluation report does not express nor imply warranty, installation, recommended use, or other product attributes that are not specifically addressed herein.

## APPENDIX C

| Gable/Hip Roofs in **Exposure C** (Roof slope between 2:12 and 12:12) | | | | | | | | | | | |
|---|---|---|---|---|---|---|---|---|---|---|---|
| Building Type | Zone | Mean Roof Height (ft) | Basic Wind Speed (mph) | | | | | | | | |
| | | | 120 | 130 | 140 | 150 | 160 | 170 | 180 | 190 | 200 |
| Enclosed/ Partially Open | 1 | 20 | -36.9 | -43.3 | -50.2 | -57.6 | -65.6 | -74.0 | -83.0 | -92.5 | -102.5 |
| | | 25 | -38.5 | -45.2 | -52.4 | -60.2 | -68.5 | -77.3 | -86.7 | -96.6 | -107.0 |
| | | 30 | -40.2 | -47.1 | -54.7 | -62.8 | -71.4 | -80.6 | -90.4 | -100.7 | -111.6 |
| | | 40 | -42.6 | -50.0 | -58.0 | -66.6 | -75.8 | -85.6 | -95.9 | -106.9 | -118.4 |
| | | 50 | -44.7 | -52.4 | -60.8 | -69.8 | -79.4 | -89.7 | -100.5 | -112.0 | -124.1 |
| | | 60 | -46.3 | -54.4 | -63.0 | -72.4 | -82.3 | -93.0 | -104.2 | -116.1 | -128.7 |
| | 2 | 20 | -53.8 | -63.2 | -73.2 | -84.1 | -95.7 | -108.0 | -121.1 | -134.9 | -149.5 |
| | | 25 | -56.2 | -66.0 | -76.5 | -87.8 | -99.9 | -112.8 | -126.5 | -140.9 | -156.1 |
| | | 30 | -58.6 | -68.8 | -79.8 | -91.6 | -104.2 | -117.6 | -131.8 | -146.9 | -162.8 |
| | | 40 | -62.2 | -73.0 | -84.6 | -97.2 | -110.5 | -124.8 | -139.9 | -155.9 | -172.7 |
| | | 50 | -65.2 | -76.5 | -88.7 | -101.8 | -115.9 | -130.8 | -146.6 | -163.4 | -181.0 |
| | | 60 | -67.6 | -79.3 | -92.0 | -105.6 | -120.1 | -135.6 | -152.0 | -169.4 | -187.7 |
| | 3 | 20 | -64.0 | -75.1 | -87.1 | -99.9 | -113.7 | -128.4 | -143.9 | -160.3 | -177.7 |
| | | 25 | -66.8 | -78.4 | -90.9 | -104.4 | -118.8 | -134.1 | -150.3 | -167.5 | -185.6 |
| | | 30 | -69.7 | -81.7 | -94.8 | -108.8 | -123.8 | -139.8 | -156.7 | -174.6 | -193.5 |
| | | 40 | -73.9 | -86.7 | -100.6 | -115.5 | -131.4 | -148.3 | -166.3 | -185.3 | -205.3 |
| | | 50 | -77.5 | -90.9 | -105.4 | -121.0 | -137.7 | -155.5 | -174.3 | -194.2 | -215.2 |
| | | 60 | -80.3 | -94.3 | -109.3 | -125.5 | -142.8 | -161.2 | -180.7 | -201.3 | -223.1 |
| Partially Enclosed | 1 | 20 | -43.2 | -50.6 | -58.7 | -67.4 | -76.7 | -86.6 | -97.1 | -108.2 | -119.9 |
| | | 25 | -45.1 | -52.9 | -61.3 | -70.4 | -80.1 | -90.4 | -101.4 | -113.0 | -125.2 |
| | | 30 | -47.0 | -55.1 | -64.0 | -73.4 | -83.5 | -94.3 | -105.7 | -117.8 | -130.5 |
| | | 40 | -49.9 | -58.5 | -67.9 | -77.9 | -88.6 | -100.1 | -112.2 | -125.0 | -138.5 |
| | | 50 | -52.3 | -61.3 | -71.1 | -81.7 | -92.9 | -104.9 | -117.6 | -131.0 | -145.2 |
| | | 60 | -54.2 | -63.6 | -73.7 | -84.7 | -96.3 | -108.7 | -121.9 | -135.8 | -150.5 |
| | 2 | 20 | -60.1 | -70.5 | -81.8 | -93.9 | -106.8 | -120.6 | -135.2 | -150.6 | -166.9 |
| | | 25 | -62.7 | -73.6 | -85.4 | -98.0 | -111.5 | -125.9 | -141.2 | -157.3 | -174.3 |
| | | 30 | -65.4 | -76.8 | -89.0 | -102.2 | -116.3 | -131.3 | -147.2 | -164.0 | -181.7 |
| | | 40 | -69.4 | -81.5 | -94.5 | -108.5 | -123.4 | -139.3 | -156.2 | -174.0 | -192.8 |
| | | 50 | -72.8 | -85.4 | -99.0 | -113.7 | -129.3 | -146.0 | -163.7 | -182.4 | -202.1 |
| | | 60 | -75.4 | -88.5 | -102.7 | -117.8 | -134.1 | -151.4 | -169.7 | -189.1 | -209.5 |
| | 3 | 20 | -70.2 | -82.4 | -95.6 | -109.7 | -124.8 | -140.9 | -158.0 | -176.0 | -195.1 |
| | | 25 | -73.3 | -86.1 | -99.8 | -114.6 | -130.4 | -147.2 | -165.0 | -183.9 | -203.7 |
| | | 30 | -76.5 | -89.7 | -104.1 | -119.5 | -135.9 | -153.5 | -172.0 | -191.7 | -212.4 |
| | | 40 | -81.1 | -95.2 | -110.5 | -126.8 | -144.3 | -162.9 | -182.6 | -203.4 | -225.4 |
| | | 50 | -85.0 | -99.8 | -115.8 | -132.9 | -151.2 | -170.7 | -191.4 | -213.2 | -236.2 |
| | | 60 | -88.2 | -103.5 | -120.0 | -137.8 | -156.7 | -177.0 | -198.4 | -221.0 | -244.9 |



This evaluation report is provided for State of Florida product approval under Rule 61G20-3. The manufacturer shall notify CREEK Technical Services, LLC of any product changes or quality assurance changes throughout the duration for which this report is valid. This evaluation report does not express nor imply warranty, installation, recommended use, or other product attributes that are not specifically addressed herein.

## APPENDIX C

| Gable/Hip Roofs in **Exposure D** (Roof slope between 2:12 and 12:12) | | | | | | | | | | | |
|---|---|---|---|---|---|---|---|---|---|---|---|
| Building Type | Zone | Mean Roof Height (ft) | Basic Wind Speed (mph) | | | | | | | | |
| | | | 120 | 130 | 140 | 150 | 160 | 170 | 180 | 190 | 200 |
| Enclosed/ Partially Open | 1 | 20 | -44.7 | -52.4 | -60.8 | -69.8 | -79.4 | -89.7 | -100.5 | -112.0 | -124.1 |
| | | 25 | -46.4 | -54.4 | -63.1 | -72.4 | -82.4 | -93.1 | -104.3 | -116.2 | -128.8 |
| | | 30 | -47.9 | -56.2 | -65.1 | -74.8 | -85.1 | -96.1 | -107.7 | -120.0 | -132.9 |
| | | 40 | -50.3 | -59.1 | -68.5 | -78.6 | -89.4 | -101.0 | -113.2 | -126.1 | -139.8 |
| | | 50 | -52.3 | -61.4 | -71.2 | -81.7 | -93.0 | -105.0 | -117.7 | -131.1 | -145.3 |
| | | 60 | -54.0 | -63.4 | -73.5 | -84.4 | -96.0 | -108.4 | -121.5 | -135.3 | -150.0 |
| | 2 | 20 | -59.0 | -69.3 | -80.3 | -92.2 | -104.9 | -118.5 | -132.8 | -148.0 | -163.9 |
| | | 25 | -61.3 | -71.9 | -83.4 | -95.7 | -108.9 | -122.9 | -137.8 | -153.6 | -170.1 |
| | | 30 | -63.2 | -74.2 | -86.1 | -98.8 | -112.4 | -126.9 | -142.3 | -158.5 | -175.6 |
| | | 40 | -66.5 | -78.0 | -90.5 | -103.9 | -118.2 | -133.4 | -149.6 | -166.6 | -184.6 |
| | | 50 | -69.1 | -81.1 | -94.1 | -108.0 | -122.8 | -138.7 | -155.5 | -173.2 | -191.9 |
| | | 60 | -71.3 | -83.7 | -97.1 | -111.4 | -126.8 | -143.1 | -160.5 | -178.8 | -198.1 |
| | 3 | 20 | -77.5 | -90.9 | -105.4 | -121.0 | -137.7 | -155.5 | -174.3 | -194.2 | -215.2 |
| | | 25 | -80.4 | -94.4 | -109.4 | -125.6 | -142.9 | -161.3 | -180.9 | -201.5 | -223.3 |
| | | 30 | -83.0 | -97.4 | -112.9 | -129.7 | -147.5 | -166.5 | -186.7 | -208.0 | -230.5 |
| | | 40 | -87.2 | -102.4 | -118.7 | -136.3 | -155.1 | -175.1 | -196.3 | -218.7 | -242.3 |
| | | 50 | -90.7 | -106.4 | -123.4 | -141.7 | -161.2 | -182.0 | -204.1 | -227.4 | -251.9 |
| | | 60 | -93.6 | -109.9 | -127.4 | -146.3 | -166.4 | -187.9 | -210.6 | -234.7 | -260.0 |
| Partially Enclosed | 1 | 20 | -52.3 | -61.3 | -71.1 | -81.7 | -92.9 | -104.9 | -117.6 | -131.0 | -145.2 |
| | | 25 | -54.2 | -63.7 | -73.8 | -84.7 | -96.4 | -108.8 | -122.0 | -136.0 | -150.6 |
| | | 30 | -56.0 | -65.7 | -76.2 | -87.5 | -99.5 | -112.3 | -126.0 | -140.3 | -155.5 |
| | | 40 | -58.9 | -69.1 | -80.1 | -92.0 | -104.6 | -118.1 | -132.4 | -147.5 | -163.5 |
| | | 50 | -61.2 | -71.8 | -83.3 | -95.6 | -108.8 | -122.8 | -137.7 | -153.4 | -169.9 |
| | | 60 | -63.2 | -74.1 | -86.0 | -98.7 | -112.3 | -126.7 | -142.1 | -158.3 | -175.4 |
| | 2 | 20 | -66.6 | -78.2 | -90.7 | -104.1 | -118.4 | -133.7 | -149.9 | -167.0 | -185.0 |
| | | 25 | -69.1 | -81.1 | -94.1 | -108.0 | -122.9 | -138.7 | -155.5 | -173.3 | -192.0 |
| | | 30 | -71.4 | -83.7 | -97.1 | -111.5 | -126.8 | -143.2 | -160.5 | -178.9 | -198.2 |
| | | 40 | -75.0 | -88.0 | -102.1 | -117.2 | -133.3 | -150.5 | -168.8 | -188.0 | -208.4 |
| | | 50 | -78.0 | -91.5 | -106.1 | -121.8 | -138.6 | -156.5 | -175.4 | -195.5 | -216.6 |
| | | 60 | -80.5 | -94.5 | -109.6 | -125.8 | -143.1 | -161.5 | -181.1 | -201.8 | -223.6 |
| | 3 | 20 | -85.0 | -99.8 | -115.8 | -132.9 | -151.2 | -170.7 | -191.4 | -213.2 | -236.2 |
| | | 25 | -88.3 | -103.6 | -120.1 | -137.9 | -156.9 | -177.1 | -198.6 | -221.3 | -245.2 |
| | | 30 | -91.1 | -106.9 | -124.0 | -142.4 | -162.0 | -182.8 | -205.0 | -228.4 | -253.1 |
| | | 40 | -95.8 | -112.4 | -130.4 | -149.7 | -170.3 | -192.2 | -215.5 | -240.1 | -266.1 |
| | | 50 | -99.6 | -116.9 | -135.5 | -155.6 | -177.0 | -199.8 | -224.0 | -249.6 | -276.6 |
| | | 60 | -102.8 | -120.6 | -139.9 | -160.6 | -182.7 | -206.3 | -231.2 | -257.7 | -285.5 |

**END OF REPORT**



This evaluation report is provided for State of Florida product approval under Rule 61G20-3. The manufacturer shall notify CREEK Technical Services, LLC of any product changes or quality assurance changes throughout the duration for which this report is valid. This evaluation report does not express nor imply warranty, installation, recommended use, or other product attributes that are not specifically addressed herein.